COTSWOLD
Est. 1981

VINCENT SHEPPARD

SYDNEY DINING CHAIR



RRP **$745**

BRAND

Vincent Sheppard

MATERIALS

Lloyd Loom weave | rattan frame

CUSHIONS

removable cover | 4 cm polyether foam filling | cushion with piping

GLIDES

nylon glides | felt glides available upon request

DIMENSIONS

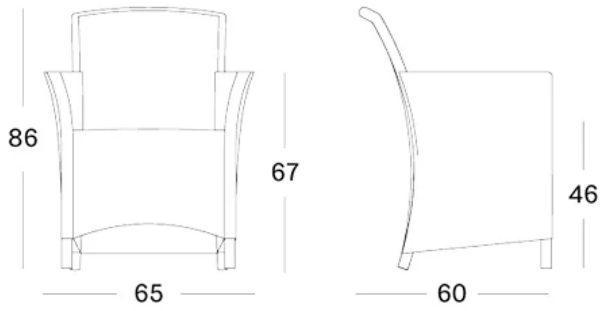

MAINTENANCE

More information https://cotswoldfurniture.com.au/en/p/i/dining-chairs/sydney-dining-chair

MAIN COLOURS


Pure white


Snow


Sparkle


Snow wash


Broken white


White wash


Cord


Nacré


Grège


Taupe


Clear


Caramel


Walnut


Aqua


Grey wash


Quartz grey


Oyster


Black


Pebble


Wengé

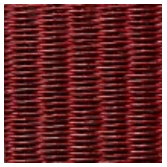
Burgundy


Dusty green


Terracotta


Ink blue


Dusty Coral

CUSHION COLOURS

Canvas - Cat. B


Black - Cat. B


Panama Fossil - Cat. B


Dark Smoke - Cat.B


Blush - Cat. B


Mineral Blue - Cat. B


Carbon Beige - Cat. B


London Stone - Cat. B


Olive Green - Cat. B


Lin - Cat. B


Almond - Cat. C


Fig Green - Cat. C

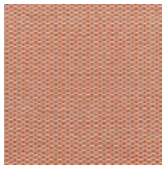
Coral - Cat. C


Savane Zinc - Cat. C


Savane Coconut -

Gypsum - Cat C

Cat. C



Fawn - Cat. B



Sienna - Cat. G



Santal - Cat. G



Lime White Bouclé - Cat. G



Negroni - Cat. G



Burnt Orange - Cat. G



Althea - Cat. G



Geneva Moon White - Cat. B



Geneva Sandstone - Cat. B



Geneva Silver Grey - Cat. B



Geneva Grey - Cat. B

ALL COLOURS SHOWN HERE ARE AS CLOSE TO THE ACTUAL COLOURS AS THE PRINTING PROCESS ALLOWS.

COTSWOLD FURNITURE